Power Solutions

Solar container capacity market trading

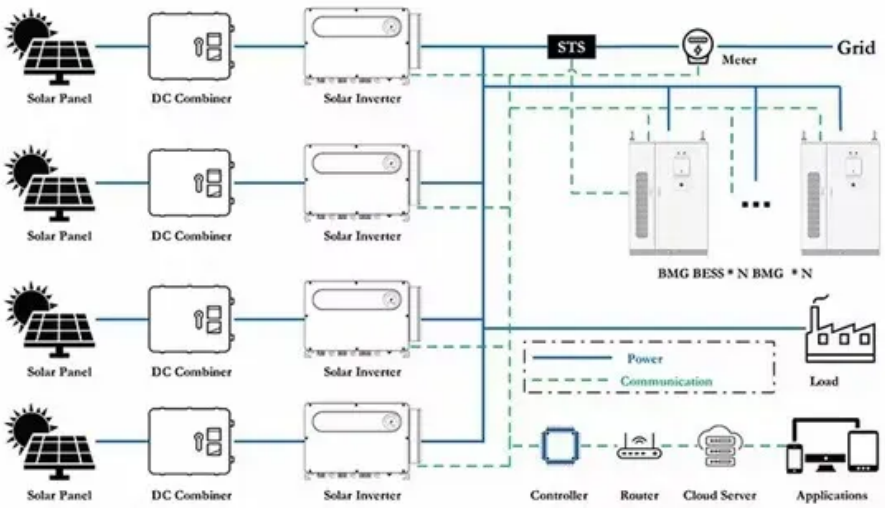

Overview

The report segments the solar container market by component, type, installation type, power capacity, and application. It addresses market drivers, restraints, opportunities, and challenges, presenting a comprehensive view across key regions. A value chain analysis of. The global solar container market is expected to grow from USD 0.29 billion in 2025 to USD 0.83 million by 2030, at a CAGR of 23.8% during the forecast period. Growth is driven by the rising adoption of off-grid and hybrid power solutions, especially in remote, disaster-prone, and developing. The Solar Container Market is an emerging segment within the renewable energy sector, characterized by the integration of solar technology into portable, modular containers. These containers serve a dual purpose: they can be utilized for power generation and as mobile energy storage solutions. The. Government initiatives and disaster resilience programs boost the adoption of solar containers for emission-free power. The above 50 kW segment is gaining traction for its ability to power large commercial operations and rural community electrification. The agriculture & irrigation segment will see. Preview the depth and quality of our market insights. Download a free sample report to explore data scope, segmentation, Table of Content and analysis before you make a decision. The Solar Container Market was valued at USD 2.8 billion in 2024 and is projected to reach USD 7.9 billion by 2034. The Solar Container Market Size was valued at 3,070 USD Million in 2024. The Solar Container Market is expected to grow from 3,420 USD Million in 2025 to 10 USD Billion by 2035. The Solar Container Market CAGR (growth rate) is expected to be around 11.3% during the forecast period (2025 - 2035). The North American region remains the largest market for solar containers, driven by a strong emphasis on renewable energy adoption. Asia-Pacific is emerging as the fastest-growing region, fueled by rapid urbanization and energy needs in developing countries. The residential segment continues to.

Solar container capacity market trading

No.1 Capacity Solar Container , Solarabox

The container is equipped with foldable high-efficiency solar panels, holding 168-336 panels that deliver 50-168 kWp of power. It is the perfect alternative to unstable grid power and ...

Functions of the mobile photovoltaik container - solarfold

The mobile solar container contains 200 PV modules with a maximum nominal power rating of 134kWp, and can be extended with suitable energy storage systems.

Mobile Solar Containers , Green City Times

Featured Off-Grid Solar Solution: LZY MSC1 Sliding Mobile Solar Container One of the most advanced systems on the market is the LZY MSC1 Sliding Mobile Solar Container. Built for performance, ...

Mobile Solar Container Report 2025: Growth Driven by Government

The global mobile solar container market is experiencing robust growth, driven by increasing demand for off-grid and temporary power solutions across diverse sectors. The market, ...

Solar Container Power Systems Market: Trends & Growth Analysis 2032

Solar Container Power Systems Market Size was estimated at 7.53 (USD Billion) in 2023. The Solar Container Power Systems Market Industry is expected to grow from 8.72 (USD ...

Solar Container Market

Overall, the solar container market is evolving from a niche, mission-driven solution into a mainstream component of resilient energy planning, with growth underpinned by economic expansion, rapid ...

Solar container Market: trends & opportunities 2035

o The Global Solar Container Market is projected to grow at a CAGR of 11.3% from 2025 to 2035, driven by increasing demand for sustainable energy solutions and advancements in solar technology.

Unraveling the Solar Container: Future of Renewable Energy

In the contemporary energy landscape, the solar container has emerged as a significant and evolving innovation, gradually shaping the future of energy supply and utilization. The current ...

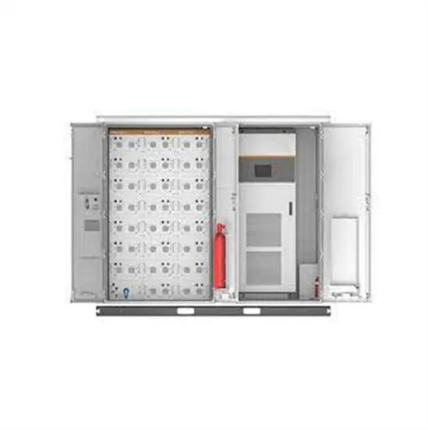

Solar Container Market

The Solar Container Market is Valued USD 2.5 Billion and projected to reach USD 10.8 Billion, growing at a CAGR of 17.5 During the Forecast period of 2025-2033. The Solar Container Market is ...

Solar Container Power Generation Systems Market Overview: Growth ...

The global solar container power generation systems market is experiencing robust growth, driven by increasing demand for reliable and sustainable off-grid and backup power solutions. The market, ...

Functions of the mobile photovoltaik container - solarfold

The mobile solar container contains 200 PV modules with a maximum nominal power rating of 134kWp, and can be extended with suitable energy storage ...

Solar Container Market Size, Growth & Opportunity Overview ...

The Solar Container Market size is expected to reach USD 7.9 billion in 2034 growing at a CAGR of 10.9. Focused on Solar Container Market size, segmentation, consumer behavior, demand ...

Solar Container Market Size, Market Assessment & Forecast 2033

Discover comprehensive analysis on the Solar Container Market, expected to grow from USD 1.5 billion in 2024 to USD 5.2 billion by 2033 at a CAGR of 15.5%. Uncover critical growth factors, market ...

How to Ship Solar Panels from China Cost-Effectively: Container

Container capacity for solar panels varies 130% by wattage--yet most guides ignore this critical factor. Discover how 250W panels fit 1,800 per container while 500W panels fit only 700, ...

Solar Container Market Size, Dynamics, Insights and Forecast

Report present a detailed and insightful study of the Solar Container Market, capturing essential metrics, emerging trends, and strategic perspectives that shape this industry. Our report offers in-depth ...

Solar Container Market Size, Share and Growth Drivers ...

The global solar container market is expected to grow from USD 0.29 billion in 2025 to USD 0.83 million by 2030, at a CAGR of 23.8% during the forecast period. ...

Solar Container Market Trends 2025

Explore the solar container market with customizable, off-grid solutions. Find verified suppliers, competitive pricing, and scalable energy storage systems. Click to discover top-tier solar ...

Solar Container Market Size, Share, Opportunities & Forecast

Market Driver The solar container market is experiencing robust growth driven by several key factors, with government policies playing a crucial role in market expansion. According to the International ...

Solar Container Market is expected to Grow with a CAGR of 20.49%

The Solar Container Market is driven by rising demand for off-grid renewable energy solutions, increasing focus on sustainable power in remote areas, and rapid deployment needs for disaster ...

Photovoltaic Container Market

The photovoltaic container market is dominated by specialized energy solution providers and established solar technology firms. **SunPower Corporation** leads with vertically integrated ...

Solar Container Market Size, Market Assessment & Forecast 2033

Solar Container Market Insights Solar Container Market size was valued at USD 1.5 Billion in 2024 and is projected to reach USD 5.2 Billion by 2033, exhibiting a CAGR of 15.5% from 2026 to 2033. The ...

Photovoltaic Module Solar Container Insights: Market Size Analysis to ...

Discover the booming photovoltaic module solar container market! This comprehensive analysis reveals key trends, growth drivers, and regional market share projections from 2025 to ...

Mobile Solar Container Modules Market

Key Market Drivers Accelerating Mobile Solar Container Module Adoption The global adoption of mobile solar container modules is propelled by urgent needs for **resilient, rapidly ...

Solar Container Market Share, Growth, Future Prospects, Forecast to ...

Solar container market was valued at $220.0 million in 2024 and is projected to reach $2,148.3 million by 2035, growing at a CAGR of 23.0% during the forecast period (2025-2035).

Mobile Solar Container Power System Strategic Insights: Analysis ...

The mobile solar container power system market is experiencing robust growth, driven by increasing demand for reliable and sustainable off-grid power solutions across diverse sectors. The market, ...

Modular Photovoltaic Container Market

For instance, a single 20-foot container system with 200 kWp solar capacity and integrated battery storage (500 kWh) can power 80-100 households in rural Sub-Saharan Africa, reducing reliance on ...

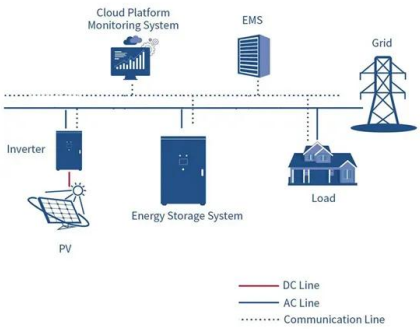

Solar Container Market Size, Share, Trends , Report 2035

Overall, the Solar Container Market appears poised for growth, driven by technological advancements and a collective push towards renewable energy solutions. The Solar Container Market is seeing ...

Contact Us

For catalog requests, pricing, or partnerships, please visit:
https://crossworldtours.co.za