Power Solutions

Honiara independent solar container project bidding

LFP 12V 100Ah

Honiara independent solar container project bidding

Honiara Energy Storage Power Station Project Tender Announcement

This article explores the project's technical scope, market opportunities, and how stakeholders can participate in shaping Solomon Islands' sustainable energy future.

BASIC DESIGN STUDY REPORT ON THE PROJECT FOR IMPROVEMENT OF HONIARA

The project will (i) introduce the first-of-its-kind near-shore marine floating solar photovoltaic power plant; (ii) install a battery energy storage system (BESS) and transmission grid with smart energy ...

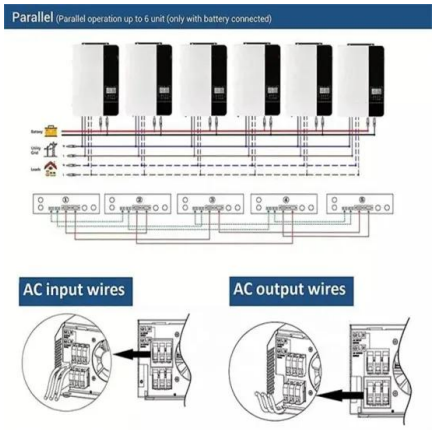

TONGA INDEPENDENT SHARED SOLAR CONTAINER ...

oslo+shared+solar+container+power+station+b iddin g Bids, RFP & Government Contracts I found on InstantMarkets providing an easy interface to find business opportunities a?, SunContainer ...

Honiara small pv energy storage project

honiara energy storage photovoltaic power generation project tender. (PV) independent power project (IPP) in Abu Dhabi, UAE. It is amongst the world''''s biggest solar PV plants. A

consortium of ...

HONIARA ENERGY STORAGE CONTAINER SELLING PRICE

Honiara new energy with solar container The Solomon Islands Renewable Energy Development Project plans to finance new solar farms in Guadalcanal and Malaita provinces, along with a utility-scale grid ...

NEW ENERGY STORAGE PROJECT IN HONIARA

The global solar storage container market is experiencing explosive growth, with demand increasing by over 200% in the past two years. Pre-fabricated containerized solutions now account for ...

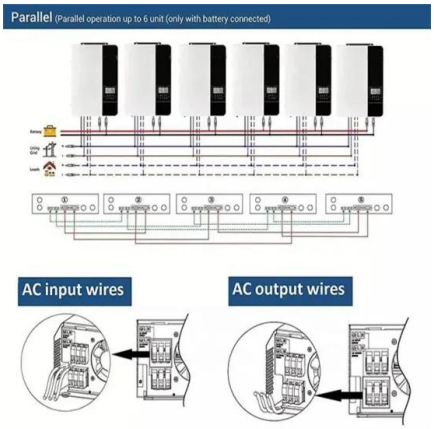

HONIARA ENERGY STORAGE PHOTOVOLTAIC POWER GENERATION PROJECT

Kampala Energy Photovoltaic Energy Storage Project Uganda's government has approved the development of a 100-MWp solar power plant with 250 MWh of battery energy storage to be ...

Honiara Energy Storage Power Station Project Tender Announcement

Why This Project Matters for Renewable Energy Growth The Honiara Energy Storage Power Station isn't just another infrastructure project--it's a cornerstone for grid stability in a region heavily reliant ...

THE WINNING BIDDER FOR THE HONIARA BATTERY PROJECT

The bidder for the south american capacitor solar container project Tesla has been awarded the contract to supply Megapacks for a 228 mega-watt (MW) project in Chile.

HONIARA 30 BILLION ENERGY STORAGE PROJECT

The global solar storage container market is experiencing explosive growth, with demand increasing by over 200% in the past two years. Pre-fabricated containerized solutions now account for ...

honiara independent energy storage project bidding

Bidding Software for Wind, Solar, and Energy Storage Conventional manual bidding approaches for energy storage and renewable assets cannot keep up with the volatility and complexity of rapidly ...

HONIARA CRYPT ENERGY STORAGE PROJECT

The global solar storage container market is experiencing explosive growth, with demand increasing by over 200% in the past two years. Pre-fabricated containerized solutions now account for ...

Contact Us

For catalog requests, pricing, or partnerships, please visit: https://crossworldtours.co.za